# Seal data sheet
## Rotary seals

**R01-F**

2008-09

## Seal housing

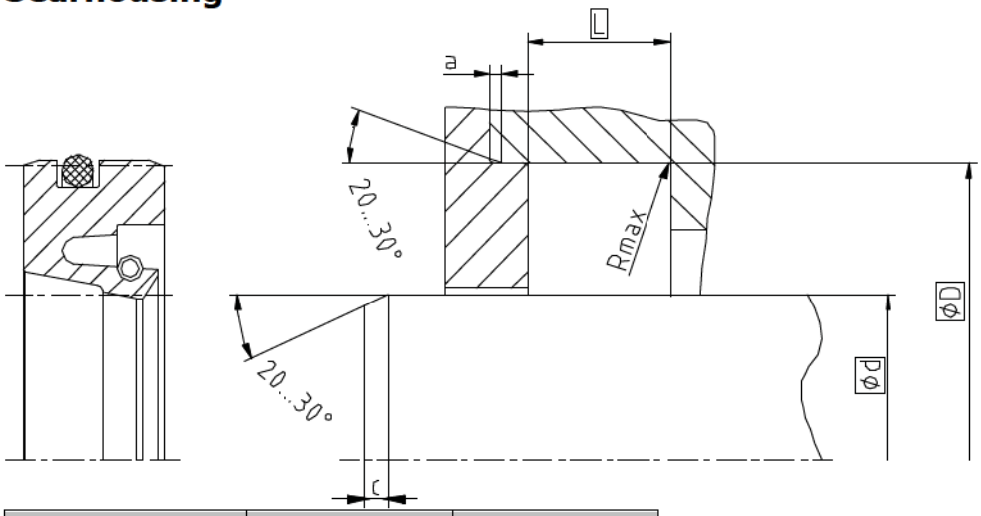


| Surface roughness | Rtmax | Ra |
|---|---|---|
| Sliding Surface | ≤ 2 µm | 0,05...0,3 µm |
| Bottom of groove | ≤ 6,3 µm | ≤ 1,6 µm |
| Groove face | ≤ 15 µm | ≤ 3 µm |

Ordering dimensions...□
**Hardness:** On the surface min 55 HRC
Hardened depth > 0,3mm
Bearing area: 50...95% and a cutting depth of 0,5xRz based on Cref = 0%

## Standard dimensions

| **Ød** h11 Rotating applications | **Ød** h11 Pivoting applications | **ØD** H8 | **L** -0,1 | **c** | **a** | **Rmax** |
|---|---|---|---|---|---|---|
| ≥ 10 ... ≤ 66 | ≥ 10 ... ≤ 33 | d + 12 | 7,0 | 3 | 1,25 | 0,4 |
| > 66 ... ≤ 110 | > 33 ... ≤ 55 | d + 15 | 9,0 | 3,5 | 1,5 | |
| > 110 ... ≤ 280 | > 55 ... ≤ 140 | d + 20 | 10,0 | 5 | 2 | |
| > 280 ... ≤ 400 | > 140 ... ≤ 200 | d + 25 | 12,5 | 6,5 | 2,5 | 0,8 |
| > 400 ... ≤ 600 | > 200 ... ≤ 400 | d + 30 | 15,0 | 7,5 | 3 | |
| - | > 400 ... ≤ 600 | d + 40 | 20,0 | 9 | 3,5 | |

## Operating parameters

| Sealing material | Energizer | Spring | Temperature | max. speed | max. pressure |
|---|---|---|---|---|---|
| SKF ECOFLON 1<br>SKF ECOFLON 2<br>SKF ECOFLON 3<br>**SKF ECOFLON 4** | **NBR70** | **1.4310** | **-30 °C...+100 °C** | **10 m/s** | **15 bar (1,5 MPa)** |
| | FPM/FKM | | -20 °C...+200 °C | | |

The stated operation conditions represent general indications. It is recommended not to use all maximum values simultaneously. Surface speed limits apply only to the presence of adequate lubrication film.

## Ordering example

R01-F, d=100mm, D=120mm, L=10mm, SKF ECOFLON 4 / NBR70 / 1.4310

| **Rotary Seal R01-F** | **100 x 120 x 10** | **SKF ECOFLON 4 / NBR70 / 1.4310** |
|---|---|---|
| Profile | d x D x L | Sealing material / O-Ring / Spring |

ECONOMOS

The contents of this data sheet remain the property of SKF Economos GmbH. Duplication, whole or in parts, only upon prior approval. SKF Economos GmbH is unable to guarantee and/or take any responsibility, obligation or liability whatsoever in connection with this information.