QisDESIGN

Imagine Another Possibility

QisDESIGN 2012

QisDESIGN

www.QisDesign.com

# QisDESIGN

2012

Website: www.QisDesign.com
Email: info@QisDesign.com

# Index


**Aurelia Light** 06
Aurelia LED Table Light 10

**Flamenca** 12
Flamenca 16

**BE Light** 18
BE Light 22

**Coral Reef Light** 24
Coral Reef LED Table Light 28
Coral Reef LED Floor Light 32

**Seagull Light** 36
Seagull LED Table Light 40
Seagull LED Floor Light 42
Seagull LED Suspension 44

**Coral Light** 46
Coral LED Table Light_45cm 50
Coral LED Table Light_55cm 52
Coral LED Floor Light 54
Coral Ball LED Suspension 56
Coral LED Suspension 58
Coral LED Wall 60

**Piano Light** 62
Piano LED Table Light 66
Piano LED Floor Light 68

**Crystal Light** 70
Crystal LED Table Light 74

# QisDesign

Imagine another possibility

Rising beyond traditional boundaries, our design amazes consumers by bringing them a sense-rich experience. Based on our brand philosophy--“Imagine another possibility”, we combine innovative technology and sophisticated design to achieve perfection. We aim to deliver a unique experience, not only fulfilling consumers’ desires but also stimulating their imagination.

Debuting in 2009, QisDesign is part of Qisda, a leading Taiwanese tech firm whose revenues in 2010 reached US$3.03 billion. It’s staffed with talented and experienced experts in all critical areas of design: industrial design, graphic design, market research, user interface, mechanical design, computer-aided design and prototype production.

QisDesign’s excellent design capabilities have won it accolades of many international awards. Albeit young, QisDesign has won a total of 87 international design awards, including Germany’s iF awards and Red Dot awards and Japan’s G-Mark awards.

# Qisda

Qisda is a leading global OEM/ODM provider of a wide range of products, including LCD monitors, projectors, multifunctional printers, mobile phones, car infortainment displays, medical electronics, and a variety of portable devices. Headquartered in Taiwan, Qisda has a strong global presence, including manufacturing sites in China, the Czech Republic and Mexico. Employing some 9800 employees around the globe and scoring revenue of US$3.03 billion in 2010, Qisda is currently one of the top manufacturers worldwide in LCD monitors, projectors and multifunctional printers.

QisDesign marks Qisda’s foray into the home décor market by launching the LED lighting products. Its prowess in engineering and manufacturing, combined with its excellent design capability, results in the birth of QisDesign LED lighting fixtures that cater to both the aesthetic and the functional demands of consumers.

# Aurelia Light

## Be allured

Mesmerizing, amazing, beautiful-Aurelia, the Moon Jellyfish, evokes a sense of tranquility bordering on a trance state. So does the eponymous LED table lamp.

Inspired by the astonishing underwater creature, the energy-efficient LED lamp offers a delight for not only your eyes but also your sense of touch. With a three-way “touch ring” dimmer, it enables easy luminosity adjustment.

Glare is eliminated thanks to LED’s small-size characteristic, making it possible to hide the LEDs in the center. LED’s directional characteristic which lets the light reflect directly on the inner shade’s strips also helps create the translucent ambience.

Aurelia

NATIONAL
MUSEUM
OF MARINE BIOLOGY &
AQUARIUM
國立海洋生物博物館

# Aurelia LED Table

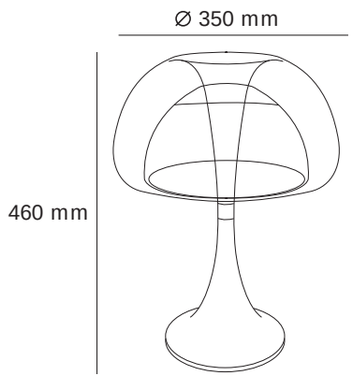


Pink
Aqua
Orange

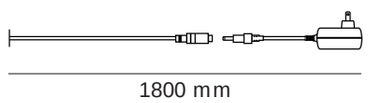


**JF11_D**

| Material | LED Color | Power Input | Switch |
|---|---|---|---|
| PMMA | Warm white | AC: 100-240V/50-60Hz<br>DC: 12V, 2A | Touch Switch |
| **Certification** | **Net Weight** | **Power Consumption** | |
| CE SE FC ETL | 1.9Kg | 18W (max.) | |

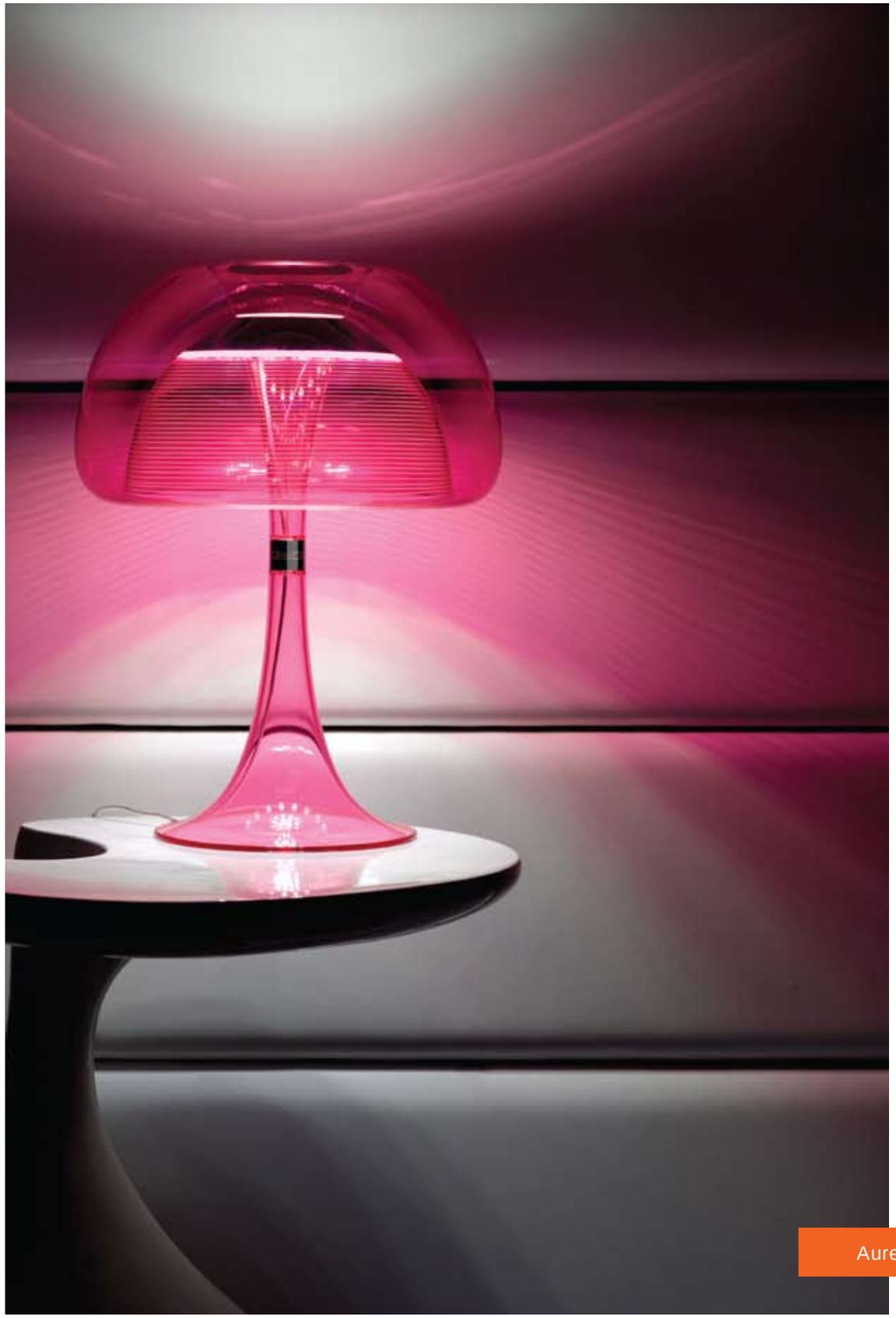

Aurelia

# Flamenca

## Full of delight

Inspired by the breathtaking movement of Flamenco dancer's ruffled skirt twirling around in the air, the Flamenca is an ambient light which captures the playfulness of this true essence.

With a gentle touch on the metallic-like plate, the dimming function gives different levels of breathing luminosity. Users can easily switch on the "dancing mode" to create a soft flowing effect. Further, when pressing and holding on longer of the top plate, users can feel various dimming illuminations and hold to turn off the light. Granted LED's low-temperature characteristic, users can enjoy the interactive fun without any hazardous concern.

The design is an exciting combination of bicolor acrylics and curvy shape that achieves dreamy and bewitching lighting effect. Designed for three fabulous colors, Flamenca is suitable for decorating in multiple lifestyle scenes, including the dinning room, bedroom or any other preferable personal space.

Flamenca

# Flamenca

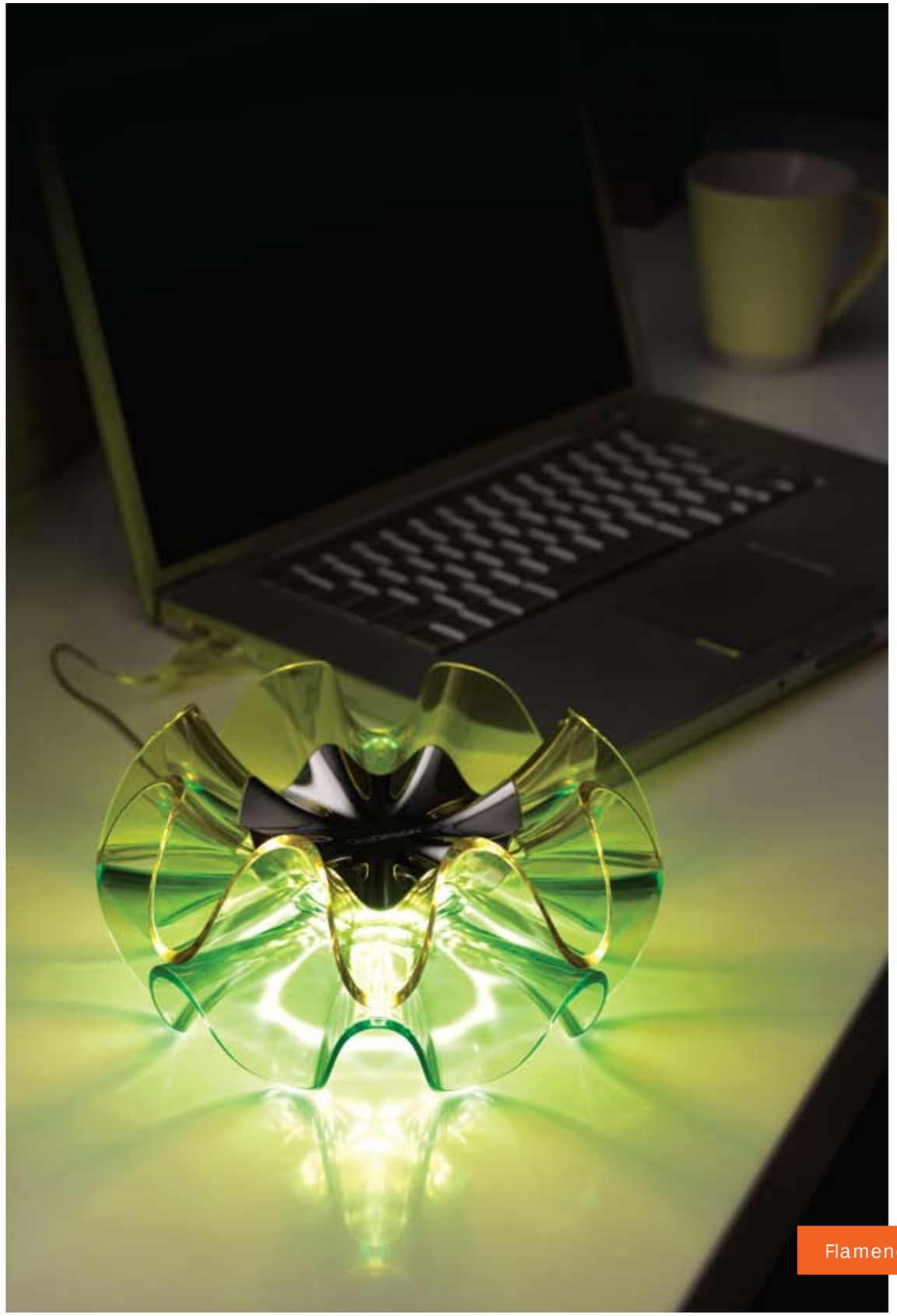

Pink
Orange
Green

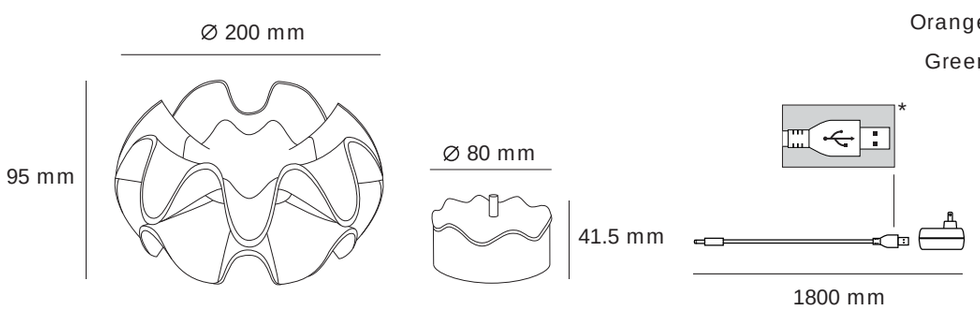


**LC11_D**

| Material | Power Input | Switch |
|---|---|---|
| PMMA | AC: 100-240V/50-60Hz, DC: 5V, 1A<br>Battery: AAx3 | Touch Switch** |

| Certification | Net Weight | Power Consumption |
|---|---|---|
| CE FC | 0.36Kg | 3W (max.) |

* Powered by either adapter, USB or battery.
** A gentle touch on the metallic-like plate will turn on the “dancing mode” to create a soft flowing effect. Press and hold on longer of the top plate to achieve various dimming illuminations and hold to turn off the light.

Flamenca

# BE Light

## Best. Bendable. Beautiful

The BE Light is an LED desk lamp that folds and sports a unique articulated design. With its clever hinge design, it can be fully extended to a height of 33.4 cm, and an angle of up to 135 degrees. It also provides adequate task lighting with white LED. When not in use, it can be folded down flat to a minimum height of 1.8 cm, taking up the least amount of space on a desk.

As with QisDesign's other LED lamps, the BE Light also adopts light guide technology to evenly distribute the LED light, eliminating all concerns over glare. Made of aluminum alloy, the BE Light is lightweight, yet sturdy. The refined metallic finish gives the BE Light a sophisticated and stylish feel.

product
design award

2012

# BE Light

Silver

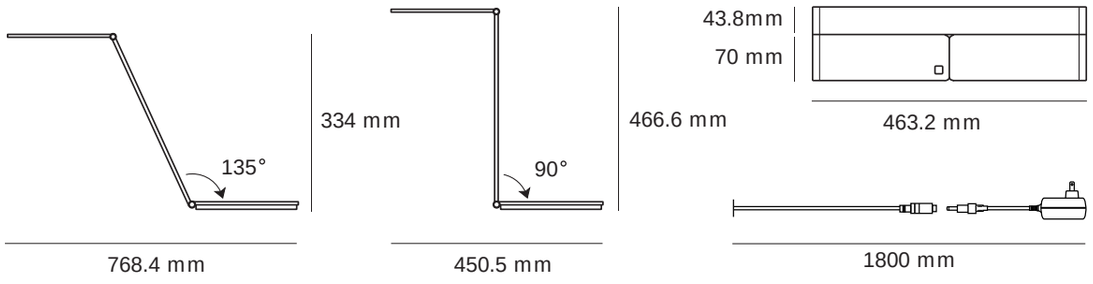


**ZR11_D**

| Material | LED Color | Power Input | Switch |
|---|---|---|---|
| Aluminum Alloy,<br>Die Casting | Warm white | AC: 100-240V/50-60Hz<br>DC: 12V, 2A | Dimmable Switch*<br>(on the base) |
| **Certification** | **Net Weight** | **Power Consumption** | **Illuminance** |
| CE FC ETL | 1.6Kg | 12W(max.) | 45cm, 1200lux(max.)<br>30cm, 2000lux(max.) |

* Press and hold the switch button to adjust brightness.

# The Coral Reef Light

## Serene in glory

The Coral Reef Light, an LED lighting fixture, features swivellable lighting petal of organic shape. While the floor lamp features 3 overlapping layers which can be activated independently by being swiveled, the table lamp has one adjustable layer and is activated by a touch on the stand. Serene, subtle, but yet movable, the Coral Reef Light evokes an image of the underwater world where the darkness is quietly subdued by the swaying flows of light.

Thanks to LED's small size and low temperature that makes it possible to maneuver the lamp, the interactive design, surpassing traditional lamp's limitation, allows user to create their own desired lighting effect and ambience.

Coral Reef

NATIONAL
MUSEUM
OF MARINE BIOLOGY &
AQUARIUM
國立海洋生物博物館

# Coral Reef LED Table

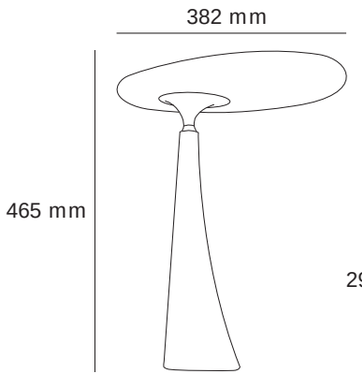


Silver

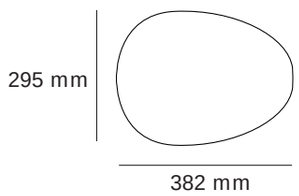


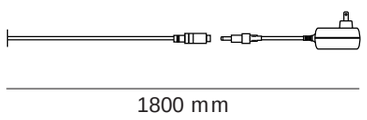


**RF10_D**

| Material | LED Color | Power Input | Switch |
|---|---|---|---|
| Aluminum Alloy,<br>Zinc alloy die casting,<br>Polycarbonate | Warm white | AC: 100-240V/50-60Hz<br>DC: 12V, 2A | Touch dimmer |
| **Certification** | **Net Weight** | **Power Consumption** | |
| CE SAA FC ETL | 6.8Kg | 24W (max.) | |

Coral Reef

Coral Reef

reddot design award
best of the best 2011

NATIONAL
MUSEUM
OF MARINE BIOLOGY &
AQUARIUM
國立海洋生物博物館

product
design
award
2011

# Coral Reef LED Floor

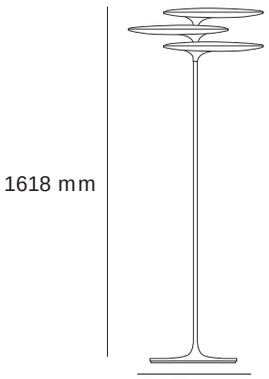


Sandy Beach Metallic

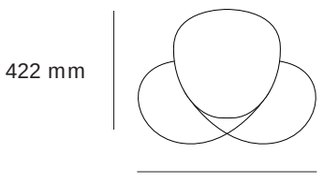

**RF10_F**

| Material | LED Color | Power Input | Switch |
|---|---|---|---|
| Aluminum Alloy,<br>Aluminum die casting,<br>Polycarbonate | Warm white | AC: 100-240V/50-60Hz<br>DC: 15V, 2.4A | ON/OFF switch<br>fitted on the power cord |
| **Certification** | **Net Weight** | **Power Consumption** | |
| CE SAA FC ETL | 12.5Kg | 28W (max.) | |

Coral Reef

Coral Reef

# The Seagull Light

## Light and free

The Seagull Light, an LED lighting fixture, takes the form of a flying seagull and functions similarly too. In response to the eco trend, the light adopts LED as lighting source which consumes much less energy than traditional lighting sources, yet provides the same brightness for both ambient light and reading functions. It has two knobs on the main body, the front one for adjusting brightness and the back for adjusting lighting angles.

The “wings” would change positions in accordance with the light adjustment, imitating a seagull flapping wings to soar into the sky. The design cleverly integrates aesthetic beauty with functions, delivering not only light but also interactive fun to users.

Seagull

reddot design award
winner 2011

# Seagull LED Table

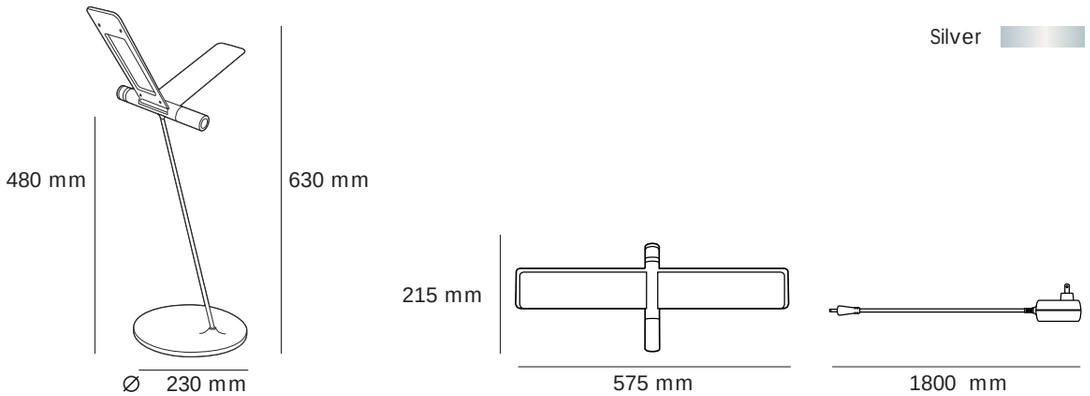


Silver




**BD10_D**

| Material | LED Color | Power Input | Switch |
|---|---|---|---|
| Aluminum Alloy,<br>Die Casting,<br>Stainless Steel | Warm white<br>Cool white | AC: 100-240V/50-60Hz<br>DC: 12V, 2A | Dimmable switch* |
| **Certification** | **Net Weight** | **Power Consumption** | **Illuminance** |
| CE ETL FC ETL | 2.3Kg | 14W(max.) | 45cm, 1600lux(max.) |

* It has two knobs on the main body, the front one for adjusting brightness and the back for adjusting lighting angles.

Seagull

reddot design award
winner 2011

# Seagull LED Floor

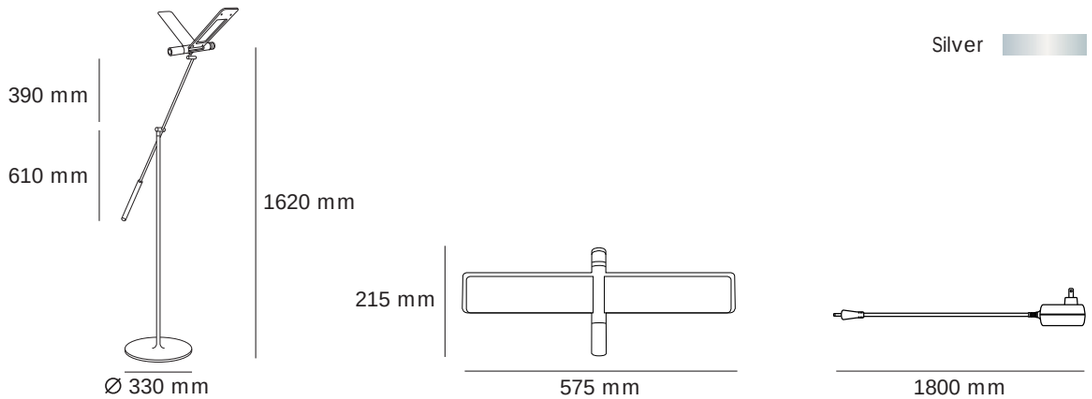


Silver

**BD10_F**

| Material | LED Color | Power Input | Switch |
|---|---|---|---|
| Aluminum Alloy,<br>Die Casting,<br>Stainless Steel | Warm white | AC: 100-240V/50-60Hz<br>DC: 12V, 2A | Dimmable switch* |
| **Certification** | **Net Weight** | **Power Consumption** | |
| CE FC ETL | 8.8Kg | 14W(max.) | |

* It has two knobs on the main body, the front one for adjusting brightness and the back for adjusting lighting angles. The pole supporting the main body has 2 axis, making it possible to turn the light in 360 degrees in vertical and horizontal direction.

Seagull

reddot design award
winner 2011

# Seagull LED Suspension

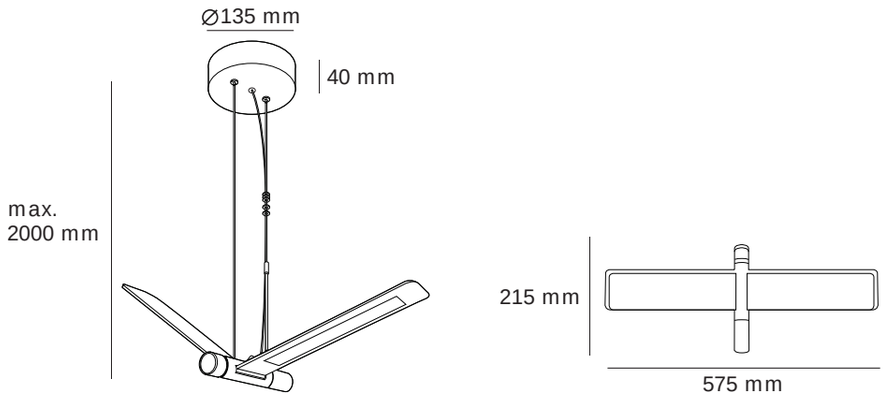


Silver

**BD10_P**

| Material | LED Color | Power Input | Switch |
|---|---|---|---|
| Aluminum Alloy,<br>Die Casting,<br>Stainless Steel | Warm white | AC: 100-240V/50-60Hz | Dimmable switch* |
| **Certification** | **Net Weight** | **Power Consumption** | |
| CE SAA FC ETL | 1.1Kg | 14W(max.) | |

* It has two knobs on the main body, the front one for adjusting brightness and the back for adjusting lighting angles.

Seagull

# The Coral Light

## Sparkling light from the water

The Coral Light, an LED lighting fixture, is inspired by the exquisite corals in the ocean. Imitating how natural coral reflects rays of light through the living sea,the Coral Light creates a visually mesmerizing effect as it graces a table, floor, wall or ceiling.

Thanks to a special light diffusion technique, the light emitted by the LED bulbs is evenly distributed on the edge of each diffuser. Besides serving as an ambient lighting fixture, its desk lamp, equipped with high bright LEDs, also provides a reading function.

Coral

reddot design award
winner 2009

NATIONAL
MUSEUM
OF MARINE BIOLOGY &
AQUARIUM
國立海洋生物博物館

GOOD
DESIGN

# Coral LED Table

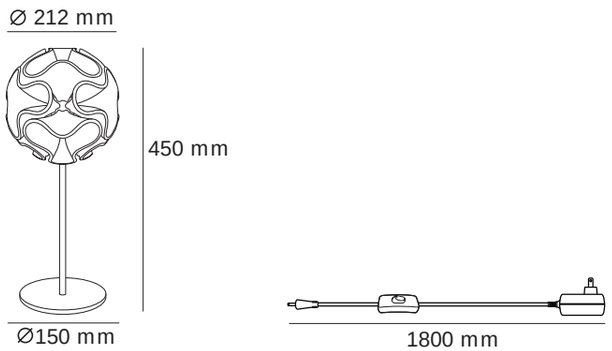


Clear in warm white
Violet
Orange

**CR01_DR45**

| Material | LED Color | Power Input | Switch | Angular Distribution |
|---|---|---|---|---|
| PMMA,<br>Stainless Steel | Warm white,<br>Cool white* | AC/100-240V<br>50-60Hz | ON/OFF switch fitted<br>on the power cord | 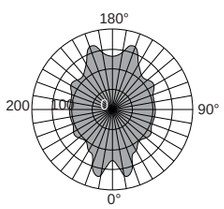 |
| **Certification** | **Net Weight** | **Power Consumption** | | |
| CE FC ETL | 2.6Kg | 7W | | |



* Clear finish is available in warm white while other finishes are available in cool white.

Coral

reddot design award
winner 2010

NATIONAL
MUSEUM
OF MARINE BIOLOGY &
AQUARIUM
國立海洋生物博物館

# Coral LED Table

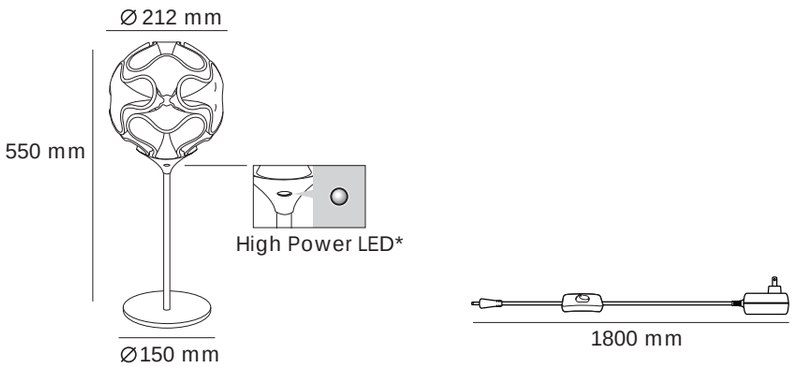


Clear

**CR01_DR55**

| Material | LED Color | Power Input | Switch |
|---|---|---|---|
| PMMA,<br>Stainless Steel | Warm white | AC: 100-240V/50-60Hz<br>DC: 15V, 1.2A | ON/OFF switch fitted<br>on the power cord |
| **Certification** | **Net Weight** | **Power Consumption** | |
| CE SAA FC ETL | 4.8Kg | 10W | |

* Equipped with high-power LED on the supporting tray, it provides reading function.

Coral

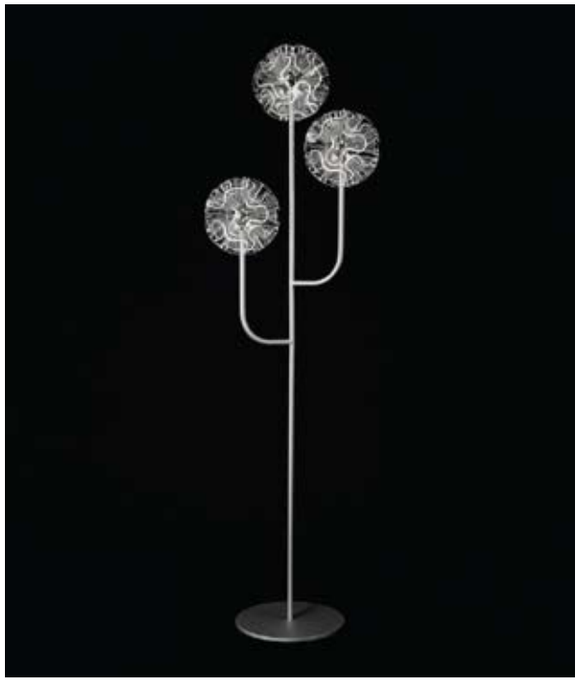

NATIONAL
MUSEUM
OF MARINE BIOLOGY &
AQUARIUM
國立海洋生物博物館

# Coral LED Floor

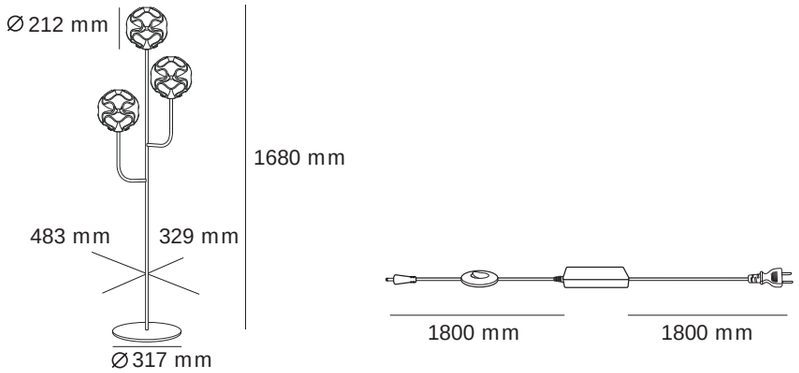


Clear




**CR01_FR**

| Material | LED Color | Power Input | Switch |
|---|---|---|---|
| PMMA,<br>Staniless Steel | Warm white | AC: 100-240V/50-60Hz<br>DC: 15V, 2.4A | ON/OFF switch fitted on the power cord |
| **Certification** | **Net Weight** | **Power Consumption** | |
| CE FC ETL | 12.1Kg | 20W | |

Coral

NATIONAL
MUSEUM
OF MARINE BIOLOGY &
AQUARIUM
國立海洋生物博物館

# Coral Ball LED Suspension

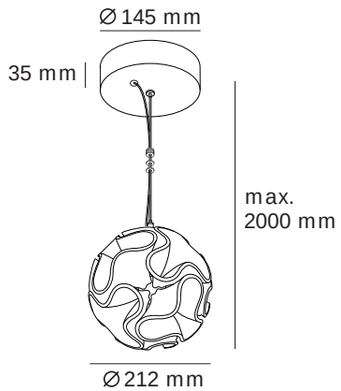


Clear in warm white
Violet
Orange

**CR01_P**

| Material | LED Color | Power Input | Switch |
|---|---|---|---|
| PMMA, Metal | Warm white,<br>Cool white* | AC: 100-240V/50-60Hz | N/A |
| **Certification** | **Net Weight** | **Power Consumption** | |
| CE ERP FC ETL | 1.8Kg | 5W | |

* Clear finish is available in warm white while other finishes are available in cool white.

Coral

reddot design award
winner 2009

NATIONAL
MUSEUM
OF MARINE BIOLOGY &
AQUARIUM
國立海洋生物博物館

# Coral LED Suspension

Frosted White

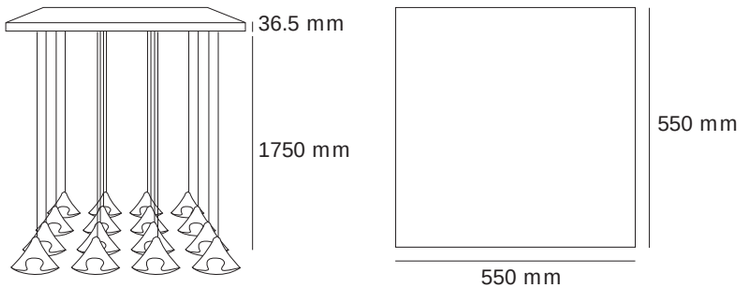


**CR01_P16**

| Material | LED Color | Power Input | Switch |
|---|---|---|---|
| PMMA, Metal | Cool white | AC: 100-240V/50-60Hz | N/A |
| **Certification** | **Net Weight** | **Power Consumption** | |
| CE FC | 7.7Kg | 7W | |

Coral

NATIONAL
MUSEUM
OF MARINE BIOLOGY &
AQUARIUM
國立海洋生物博物館

# Coral LED Wall

Clear in warm white

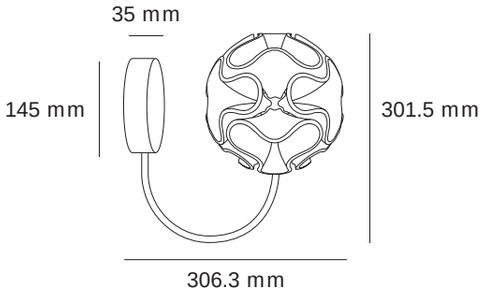


**CR01_W**

| Material | LED Color | Power Input | Switch |
|---|---|---|---|
| PMMA, Metal | Warm white | AC: 100-240V/50-60Hz | N/A |
| Certification | Net Weight | Power Consumption | |
| CE FC ETL | 1.9Kg | 5W | |

Coral

# The Piano Light

## Play with light

Inspired by the piano, the Piano Light, an LED lighting fixture, allows users to play the light as if they were playing the piano. Utilizing LED's low- temperature characteristic, which makes it possible to touch the product's surface without being burned, the Piano Light allows consumers to interact with the light.

The illumination is made possible by a special light guide technique, another living example of how QisDesign brings technology into home décor products. Its piano-like sleek feel, coupled with the fun-to-play interface, brings consumers an amazing experience.

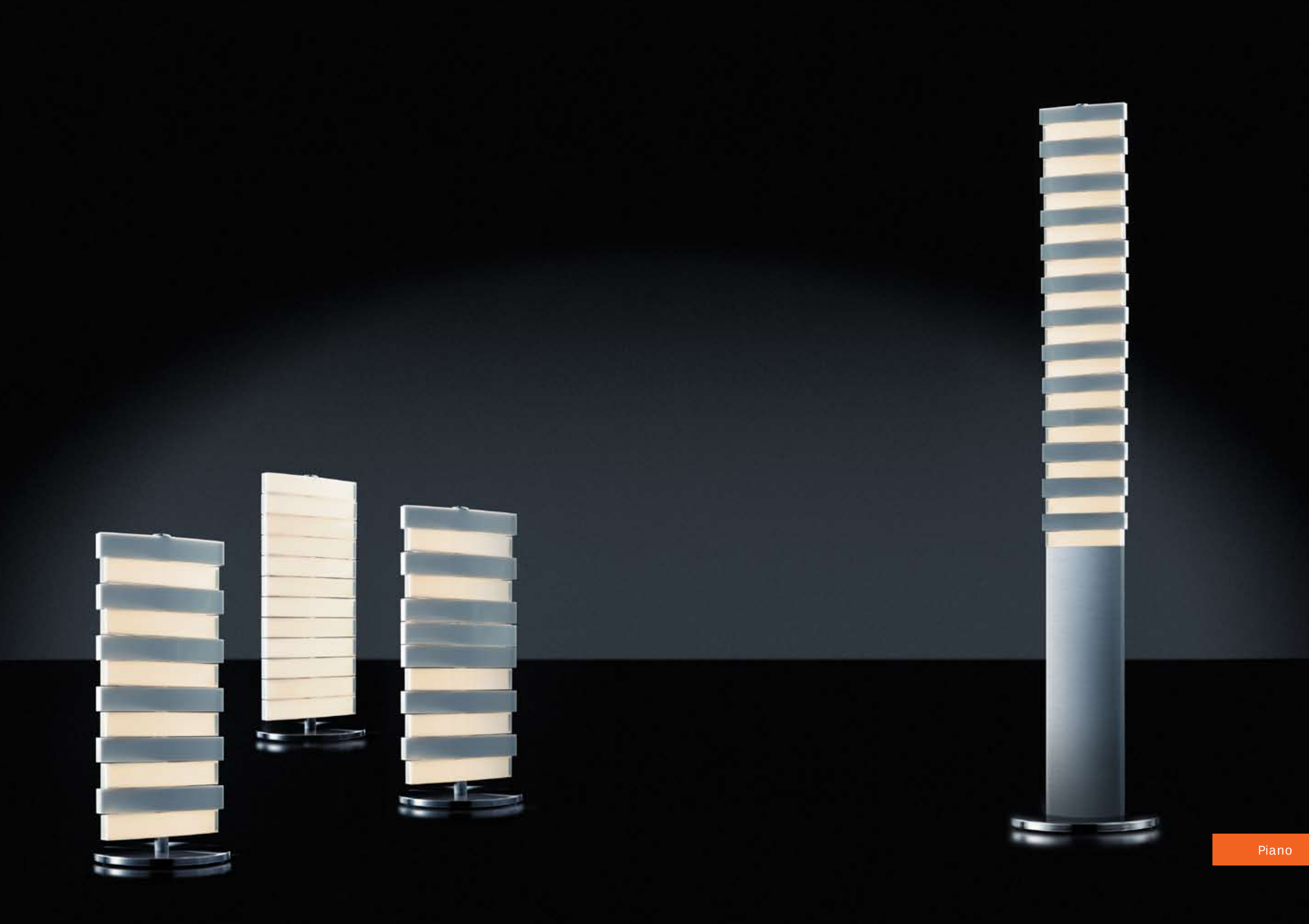

Piano

reddot design award
winner 2010

# Piano LED Table

White

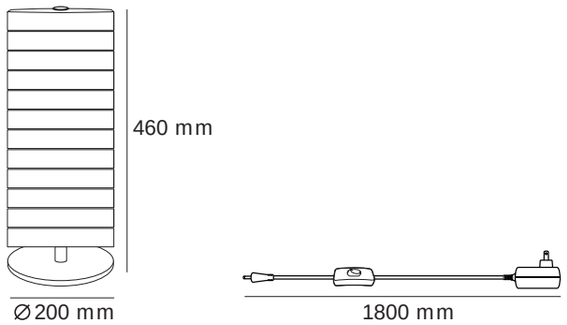


**PA01_D**

| Material | LED Color | Power Input | Switch | Angular Distribution |
|---|---|---|---|---|
| Polycarbonate, Stainless Steel | Warm white | AC: 100-240V/50-60Hz<br>DC: 15V, 1.2A | ON/OFF switch fitted on the power cord | 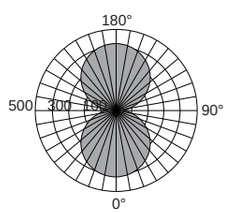 |
| **Certification** | **Net Weight** | **Power Consumption** | | |
| CE FC | 3.5 kg | 15W (max.) | | |

Piano

reddot design award
winner 2009

GOOD
DESIGN

# Piano LED Floor

White

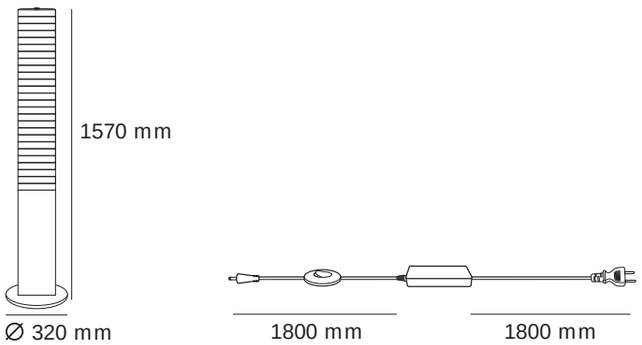


**PA01_F**

| Material | LED Color | Power Input | Switch |
|---|---|---|---|
| Polycarbonate, Stainless Steel | Warm white | AC: 100-240V/50-60Hz<br>DC: 15V, 2.4A | ON/OFF switch fitted on the power cord |
| **Certification** | **Net Weight** | **Power Consumption** | |
| CE SAA FC ETL | 12.8 Kg | 32W (max.) | |

Piano

# The Crystal Light

## Illumination and Imagination

The Crystal Light, an LED lighting fixture, amazes consumers with its fascinating color-changing feature. It's composed of various "crystals"--shimmering with silver, sparkling like diamonds, glittering with illuminating reflection. Consumers can assemble these "crystals", each of which is connected by a magnet, into any form they desire. The interactive feature is made possible by LED's low-temperature characteristics.

Consumers can change the light mode with a remote control to create different lighting effects to fit their moods and environments. The Crystal Light not only provides consumers with illumination, but also stimulates their imagination.

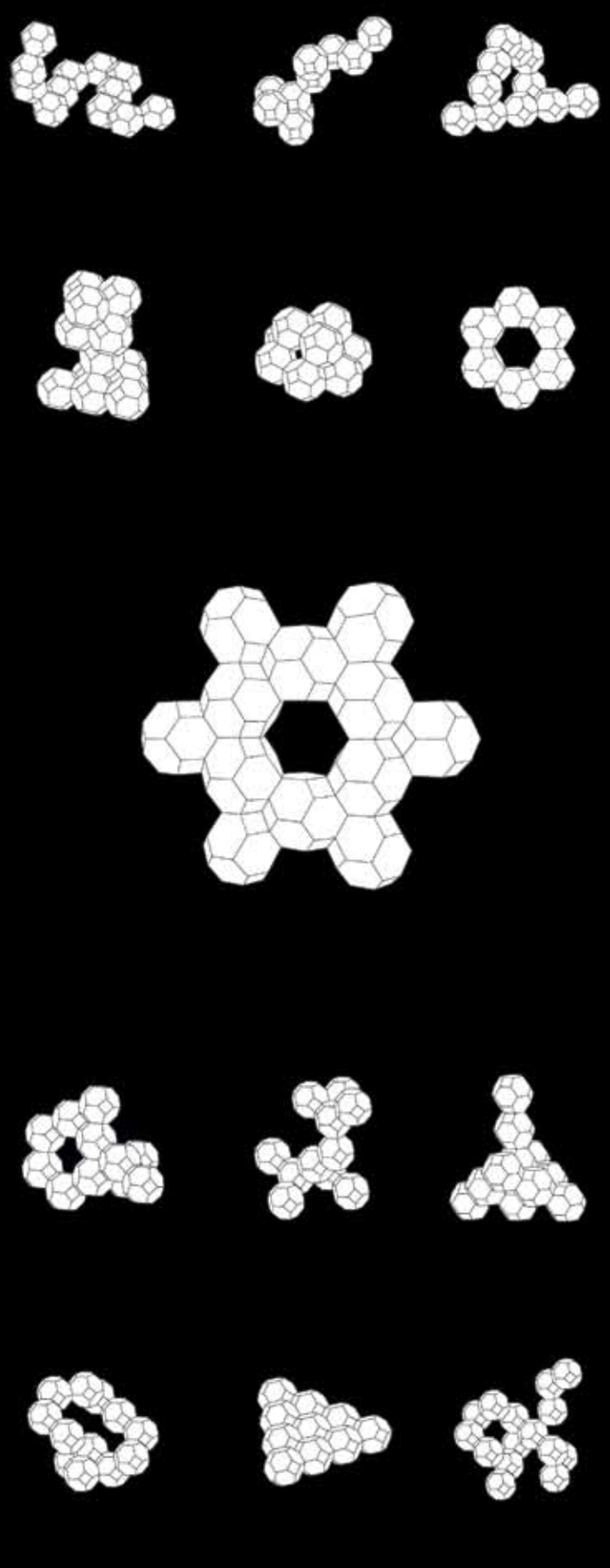

reddot design award
winner 2009

# Crystal LED Table

Silver

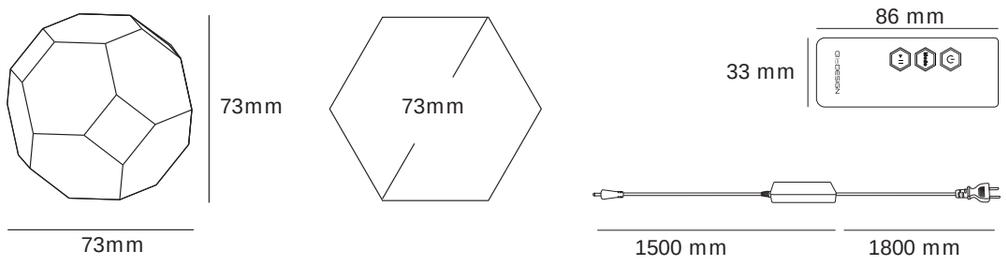


**NV01**

| Material | LED Color | Power Input | Switch |
|---|---|---|---|
| Polycarbonate | RGB LEDs | AC: 100-240V/50-60Hz<br>DC: 15V, 1.2A | Remote control* |
| Certification | Net Weight | Power Consumption | |
| CE FC | 1.1kg/set** | 7W (max.15W for sets with 16 lighting units) | |

* Remote control used for 2 pre-programmed lighting modes: Gradient (default)and Full Spectrum.
** Each Crystal Light set comes in 8 lighting units.

Crystal

QisDESIGN

www.QisDesign.com
www.facebook.com/QisDesign
info@QisDesign.com